49S78-05170 / 49S78-05180 (S14 Silvia)

49S78-05170	TD05H-06*18G(8.0cm2)
49S78-05180	TD05H-06*18G(10.0cm2)

Actuator settings (Kpa)	
P1 @ 1mm	50.7
P2 @ 5mm	66.7

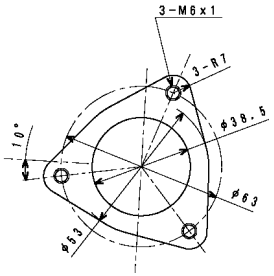

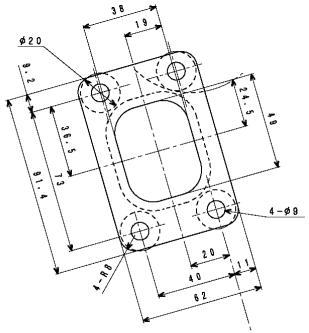

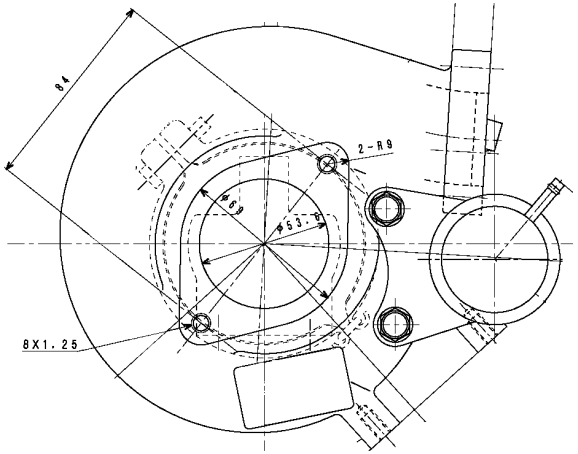

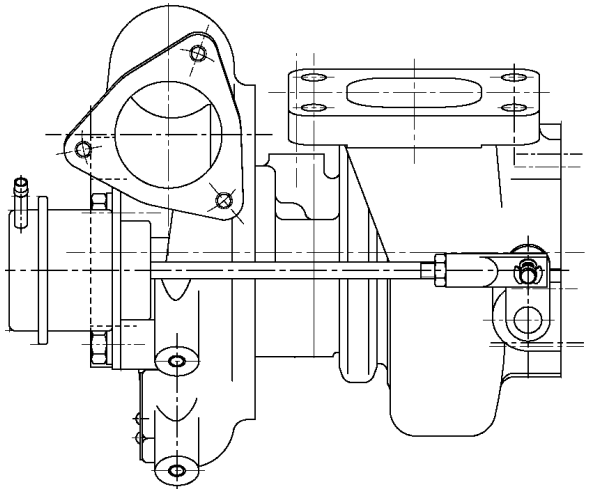

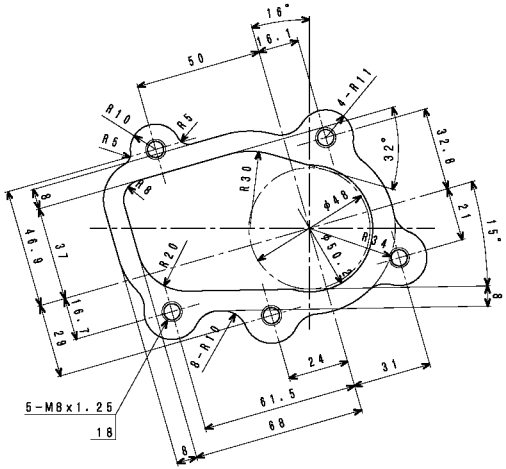

© 2012 MITSUBISHI HEAVY INDUSTRIES, LTD. All Rights Reserved.